Assembly Instructions for the KA Electronics MS Mini

7.10.23

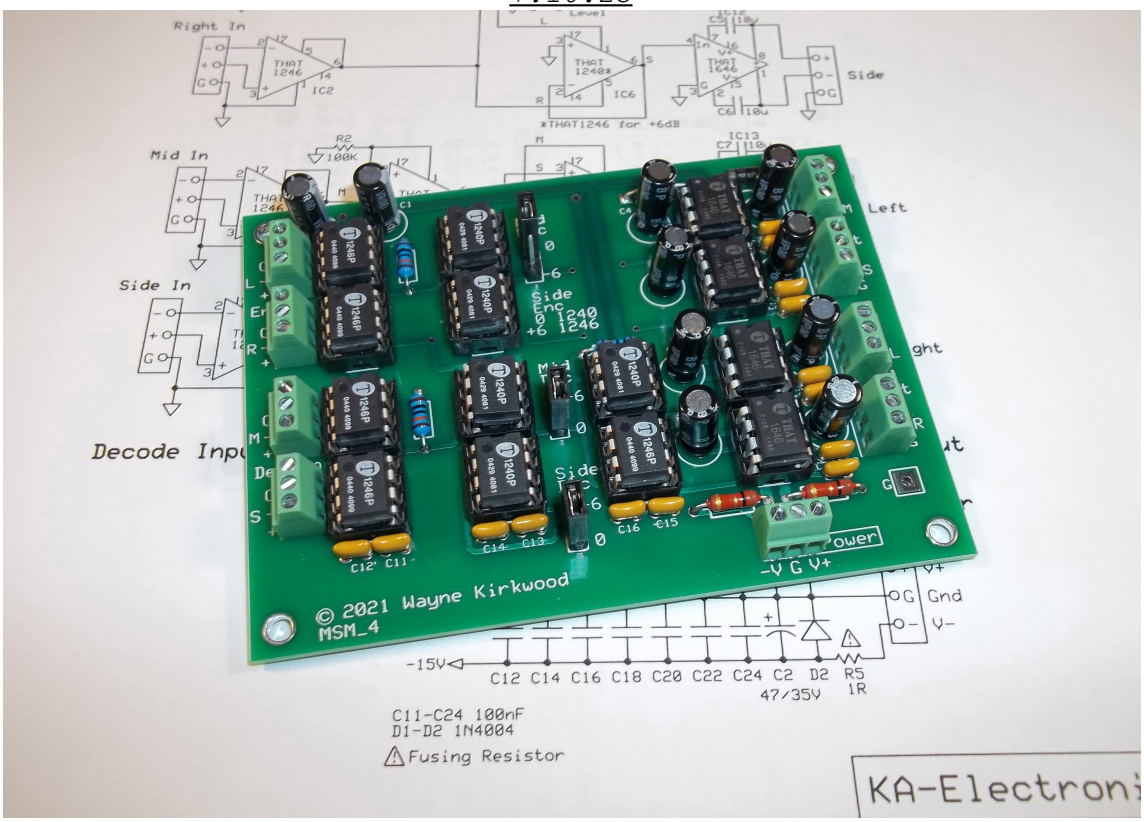

Mid Side MS Mini PC Board

Install IC sockets

Place the PC Board on the work bench silkscreen side face up.

Place **(14)** 8 pin IC sockets into their respective locations. Observe orientation of the notch. Make sure that you do not place the sockets in the bypass capacitor holes.

Tip: Lift the board up and place a piece of cardboard on top of the board to form a sandwich of PC board, sockets and cardboard. The cardboard is used to hold the sockets in place so the board can be turned over without the sockets dropping out. Flip the board over.

Tack Solder only two of the corner IC pins. Put downward pressure on the PC board to make certain the sockets are seated on the board as you solder.

Once all the IC sockets are tack soldered, flip the board over.

Make certain that each socket is correctly oriented, fully seated on the board and square.

If you're satisfied with the placement of the sockets, solder all of the remaining pins. Do not overfill the connection with solder because it can run underneath the socket and form a short between pins.

Visually check each pin's connection particularly those to the ground plane. Reheat any pins if needed. Do not trim the IC socket leads.

Install resistors and diodes

Install **(3)** 100KΩ 1% resistors at R1-R3.

Install **(2)** 1Ω 1W metal film "fusible" resistors at R4 and R5.

Install diodes in the following locations.

Install **(2)** 1N4004 diodes at D1 and D2. Observe polarity.

Install ceramic capacitors

Install **(14)** 100 nF (0.1uF) at C11-C24.

Install jumper headers

Install the jumper shunts onto the header pins before you solder them. (The shunts serve as insulators that allow you to position them while soldering without burning your fingers.)

You will need **(3)** shunts. The shunts are positioned during installation in the locations that will be used in final test.

The shunts should be installed with small openings on the bottom.

When installing the headers, tack solder only one pin and reheat it to adjust the position of the header so that it's square and flush with the board. Once you're satisfied with the orientation of the headers solder the remaining pins.

Install **(3)** 3 pin headers at "Mid Enc, Mid Dec and Side Dec."

"Mid Enc" should have a shunt in the "0" (0 dB) position.

"Mid Dec" should have a shunt in the "0" position.

"Side Dec" should have a shunt in the "0" position.

Install Phoenix connectors

When installing the Phoenix connectors make sure the openings for the wires point outward to the edge of the board. When installing the connectors, tack solder only one pin and reheat it to adjust the position of the connector so that it's square and flush with the board. Once you're satisfied with the orientation of the connector, solder the remaining pins.

Install **(9)** 3 pin Phoenix connectors.

Install electrolytic capacitors

Note: The + (positive) terminals for the electrolytic capacitors have a square pad. Where space permits there is also a "+" silkscreen marking. The longer capacitor lead is the positive lead.

Bipolar capacitors, which do not have a polarity, will also be installed in eight locations. Make certain that you have the right type of capacitor before soldering it.

Install **(8)** 10uF 35V (or 50V) bipolar electrolytic capacitors at C3-C10.

Install **(2)** 47uF 35V polarized electrolytic capacitors at C1 and C2. The polarity of these capacitors are critical.

Note: Do not install the ICs at this time.

Check all solder connections and reheat or re-flow them if necessary

When component leads are trimmed after soldering the solder joint becomes fractured. It is always a good idea to reflow all solder connections after lead trimming while checking for bridges or pins which may have missed being soldered.

If you add solder during this step do so sparingly particularly under IC sockets. Solder can flow through the PC board vias to the underside of the IC socket and cause shorts between pins.

If you prefer to remove the solder flux residue from the PC board now is a very good time to do it.

When you're finished cleaning the PC board inspect every joint under magnification.

Install spacers

Install **four** 4-40 threaded hex spacers at the board mounting holes. Place the **four** fiber washers between the PC board and the hex spacer and secure using four 4-40 1/4" screws. Four additional screws and fiber washers are in the bill-of-materials for securing the PC board to the chassis.

Initial Tests

The board should be tested on a power supply before installing the ICs.

Initial DC Tests

Connect a source of bipolar DC power.

If a variable power supply is used, slowly raise the voltage to about +/-15V.

There should be no significant current draw. If excess current is drawn check the board for solder bridges and correct polarity of D4 and 5 and all the electrolytic capacitors.

The following steps check the voltages at the IC sockets without the ICs installed.

Check the voltages at pin 7 of IC1-IC10. It should be +15V. The voltages at pin 4 of the aforementioned ICs should be -15V.

Check the voltage at pin 6 of IC11-IC14. It should be +15V. The voltages at pin 5 should be -15V.

If any of the voltages are out of range look for solder bridges or an un-soldered pin or component lead.

Remove power.

Install the ICs

Install **(5)** THAT1246 at IC1-IC4 and IC10.

Install **(5)** THAT1240 at IC5-IC9.

Install **(4)** THAT1646 at IC11-IC14.

Note: You will have a THAT1246 left over. This IC may be used at IC6 after final test for a +6 Side encode level.

Offset and Current Draw Tests

Reconnect power.

If a variable power supply is used slowly raise the voltage to about +/-15V.

Measure the voltages across R4 and R5, the 1Ω resistors. The voltages should typically be less than 50 mV indicating a current draw of less than 50 mA.

Measure the DC voltages of the IC pins listed below. No input or output should be pinned to a supply rail. Typical offsets will be +/- 15 mV or less.

IC1-IC10 pin 6 output.

IC11 and IC14 pins 1 and 8.

Remove power.

Signal Tests

A signal generator (or DAC output) and level meter (or A/D inputs) are required. The instrument connections may be balanced, un-balanced or a combination of both.

Test the Input and Output Circuitry

The level measurements performed here check the board for unity gain signal passage.

Tip: It is important to note that when testing Mid/Side systems is that mono test signals do not, by definition, produce a Side signal. Test signals in only one channel produce the Side or difference signal needed for internal tests. For this reason pay particular attention when instructed to feed tone into only one channel.

When making level measurements on THAT1646 outputs use a high impedance or "bridging" (approx. 10KΩ or greater) loading. A THAT1646 loaded in 600Ω will read approximately -0.7 dB less. If a 600Ω load is anticipated in final use, take this into account.

Unless specified all AC and DC measurements are made relative to ground.

In the next step you'll be asked to loop the Encode Outputs into the Decode Inputs. By looping through the Mid/Side Inserts the full signal path can be checked.

Connect the Mid Encode Out to the Mid Decode Input using a short length of 2

conductor cable. It's not really necessary at this point to tie the shield only the two conductors.

Connect the Side Encode Out to the Side Decode Input in the same manner.

Apply power.

Check the Left and Encode Path

Feed a 0 dBu (775 mV RMS) 1 kHz tone into the Left and Right Encode Inputs. The generator can be either balanced or unbalanced. If unbalanced, ground both the G and "-" inputs.

Measure the output level at the Left and Right Decode Outputs. If a single-ended unbalanced instrument is used, ground the "-" output. The output levels for both channels should measure 0 dBu.

Remove the tone feeding the Left Channel Encode input. Continue feeding tone into the right channel. The Right channel output should continue to read 0 dBu. The Left output should read below -50 dBu typically -60 dBu.

Reconnect tone to the Left channel Encode input and remove tone from the right channel input. The Left channel output should continue to read 0 dBu. The Right output should read below -50 dBu typically -60 dBu.

With tone feeding only the Left channel measure the signal level at the Mid Encode Output. The level should read 0 dBu.

Move the "Mid Enc" link to -6 dB. With tone feeding only the Left channel measure the signal level at the Mid Encode Output. The level should read -6 dBu.

Move the "Mid Dec" link to +6 dB. With tone feeding only the Left channel measure the signal level at the Left Decode Output. The level should read 0 dBu.

Move both the Mid Enc and Mid Dec links back to the 0 dB position.

With tone still feeding the Left Channel Encode input measure the level at IC8 pin 6. The level should be -6 dBu.

Move the "Side Dec" link to the -6 dB position. With tone feeding only the Left channel measure the signal level at IC8 pin 6. The level should read -12 dBu.

Move the "Side Dec" link back to the 0 dB position.

When attenuation in the Mid Insert is desired link both the Mid Encode level to -6 dB and the Mid Decode level to -6dB.

When gain in the Side Insert is desired install a THAT1246 at IC6 and link the Side Dec level to -6 dB.

This completes functional checkout of the MS Mini circuitry.

For those that wish to do so we recommend also performing noise and distortion measurements using software-based tools and audio converters.

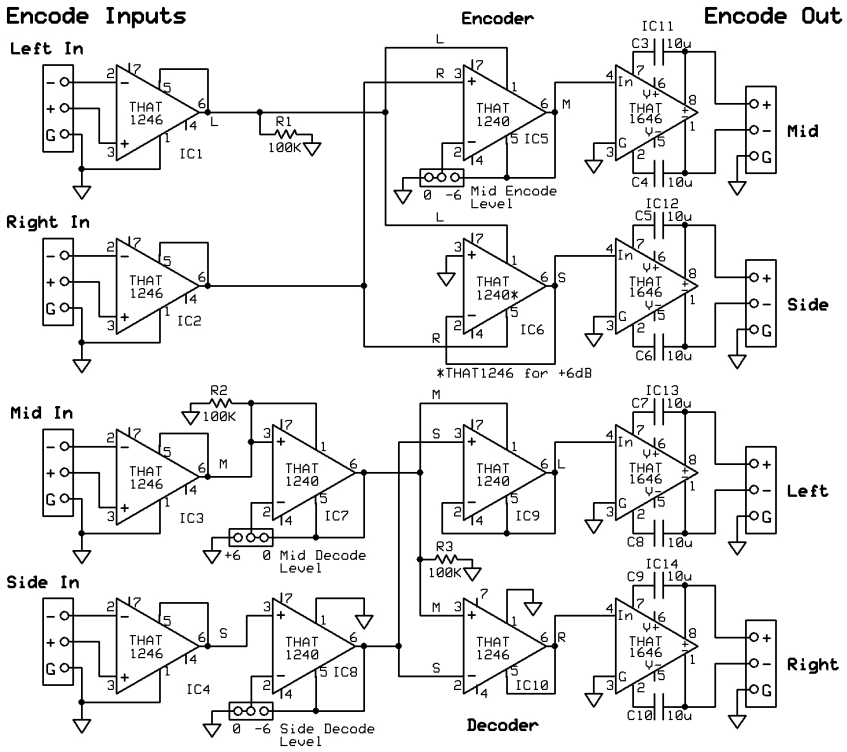

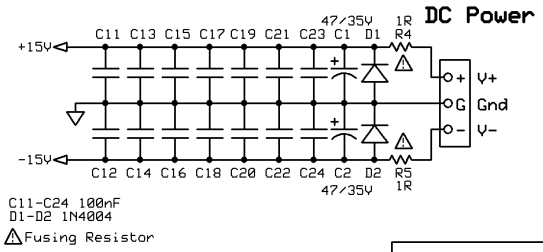

KA-Electronics/Rockmore-Labs		
Mid Side Mini		
Wayne Kirkwood © 2021	Rev 1.0 MSM_4 8/29/2021	Sheet 1 of 1

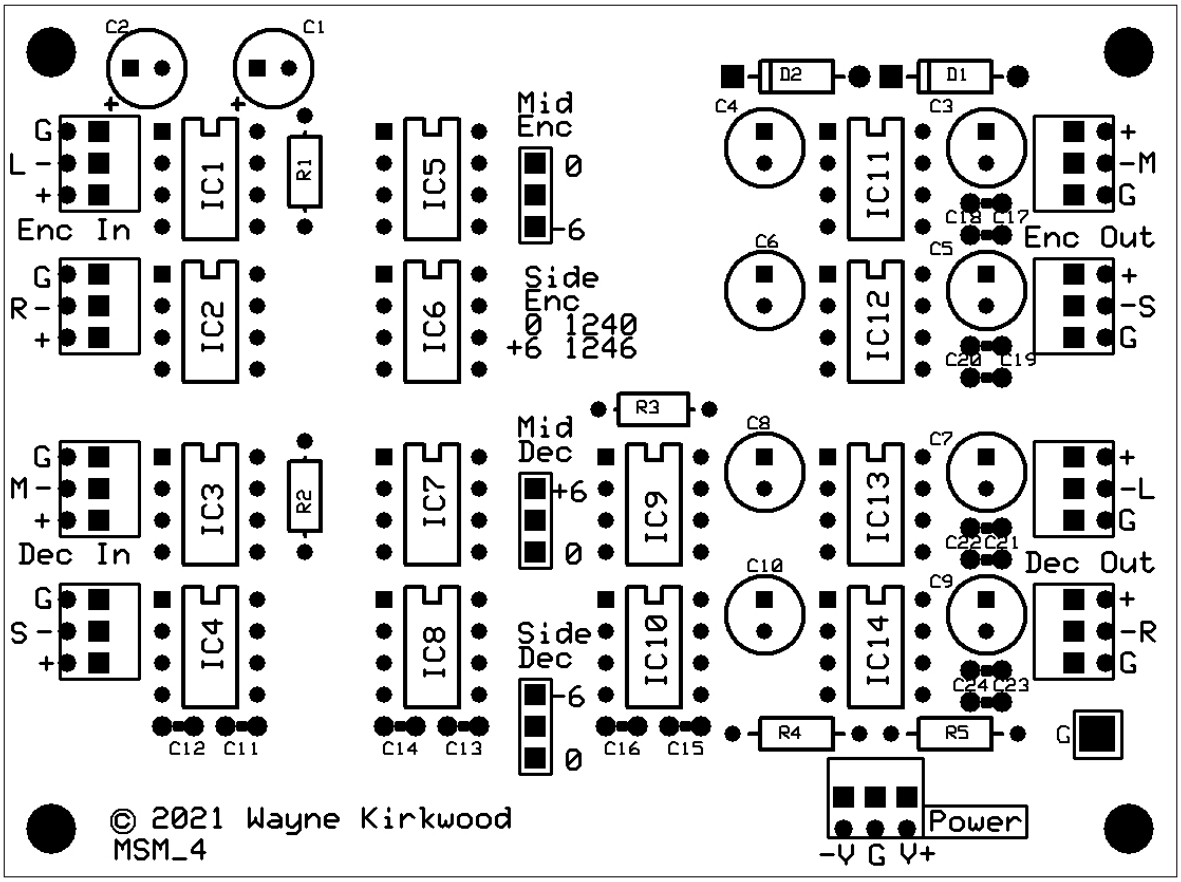

Mid Side MS Mini Component Placement

Detailed Parts List

A complete bill of materials is available from Mouser Electronics:

Mid Side Mini BOM V4 PCB with THAT ICs:

https://www.mouser.com/ProjectManager/ProjectDetail.aspx?AccessID=238566cd15

Other Resources

Pro Audio Design Forum Stereo Width Controller Build Thread:

https://www.proaudiodesignforum.com/forum/php/viewtopic.php?f=7&t=1272

For more information contact: sales@ka-electronics.com